REVISION
A

5W Electric Guitar Amplifier

- Class A Single Ended Pentode Output
- 12AX7 Small Signal Dual Triode Pre-Amp
- 6V6GT Power Pentode Output
- Designed & Drawn by Petter Blix

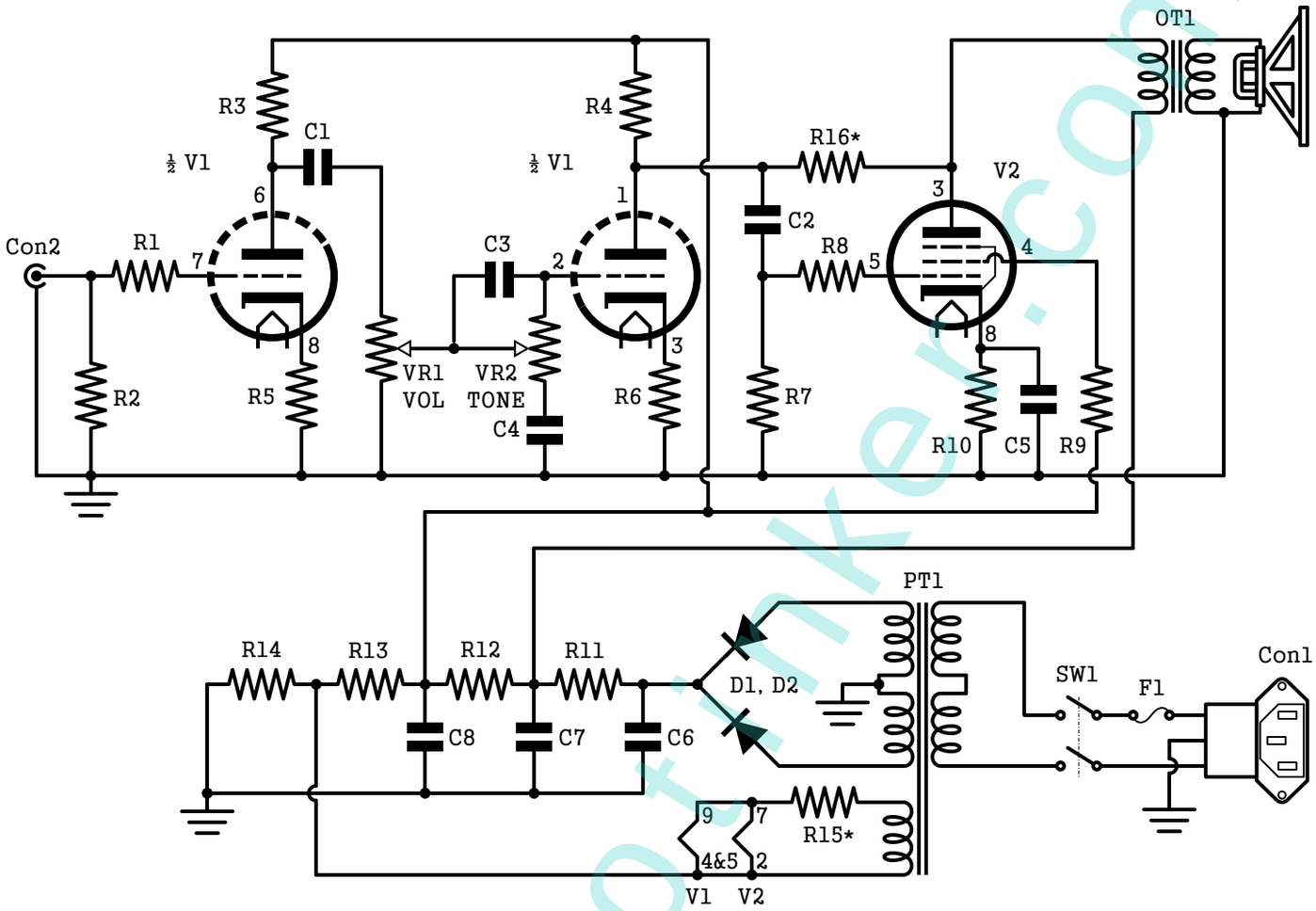

C1,C2	.02uF/450V	PT1	500VCT @ 60mA & 6.3VAC @ 750mA (EDCOR XPWR136 OR SIMILAR)
C3	470pF/450V	OT1	5K : 8Ω, SINGLE ENDED (EDCOR GXSE10-8-5k OR SIMILAR)
C4	4700pF/450V	V1	12AX7/ECC83
C5	10uF/25V	V2	6V6GT
C6	10uF/400V	F1	FUSE, 1A
C7, C8	47uF/400V	SW1	POWER SWITCH
D1,D2	1N4007	Con1	IEC POWER ENTRY/LINE FILTER
R1	47k	Con2	1/4" PHONO RECEPTACLE
R2, R16*	1M		
R3, R4	100k		
R5, R6, R8	1k2		
R7	470k		
R9	1k, CC		
R10, R11	470Ω, 5W		
R12	10k, 2W		
R13	270k, CC		
R14	47k, CC		
R15*	7.5Ω, 5W		
VR1, VR2	1M, Audio Taper		

* OPTIONAL

DISCLAIMER

THIS SCHEMATIC IS PROVIDED FOR EDUCATIONAL PURPOSE ONLY. PERIOD.

COPYRIGHT NOTICE

THIS IS A SCHEMATIC AVAILABLE FOR FREE AT WWW.AUDIOTINKER.COM FOR PERSONAL USE ONLY. DO NOT COPY, DISTRIBUTE, PUBLISH, SHARE ETC. WITHOUT WRITTEN CONSENT FROM THE COPYRIGHT HOLDER.

© 2015 AudioTinker.com. ALL RIGHTS RESERVED.

www.audiotinker.com